1850453
Cambridge Valet-AM

Parts and Hardware List

A.	Top Assembly	1 pc
B.	Spindles	2 pcs
C.	Base Assembly	1 pc
D.	Allen Head Bolts	2 pcs
E.	Lock Washers	2 pcs
F.	Flat Washers	2 pcs
G.	Allen Head Wrench	1 pc
H.	Cast Finial	1 pc

∗ Please make sure that you have all the parts and hardware indicated above before you begin assembly of this item.
∗ Use the hardware illustration to determine correct piece and size.
∗ This item should be assembled on a soft surface to prevent scratching the finish during assembly.
∗ This item may require periodic tightening.

Hardware Illustrations

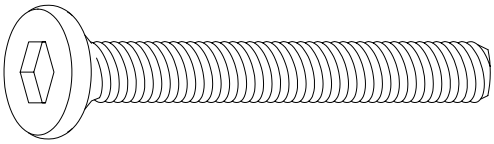

D. Allen Head Bolt

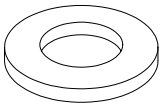

F. Flat Washer

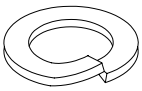

E. Lock Washer

1850453
Cambridge Valet-AM
Parts required

A.	Top Assembly	1 pc	E.	Lock Washers	2 pcs
B.	Spindles	2 pcs	F.	Flat Washers	2 pcs
C.	Base Assembly	1 pc	G.	Allen Head Wrench	1 pc
D.	Allen Head Bolts	2 pcs	H.	Cast Finial	1 pc

1. **Attach Spindles (B)** Insert the exposed threads of Spindles (B) into the pre-threaded holes in the bottom of Top Assembly (A). Tighten by turning in clockwise direction. Refer to illustration.
2. **Attach Base Assembly (C).** Align the holes of the Base Assembly (C) with the pre-threaded holes in the bottom of Spindles (B). Secure with Allen Head Bolts (D), Lock Washers (E) & Flat Washers (F) using the Allen Head Wrench (G). Refer to illustration.
3. **Attach Finial (H)** Insert the exposed thread of Finial (H) into the pre-threaded holes in the top of Top Assembly (A). Secure by turing in a clockwise direction. Refer to illustration.

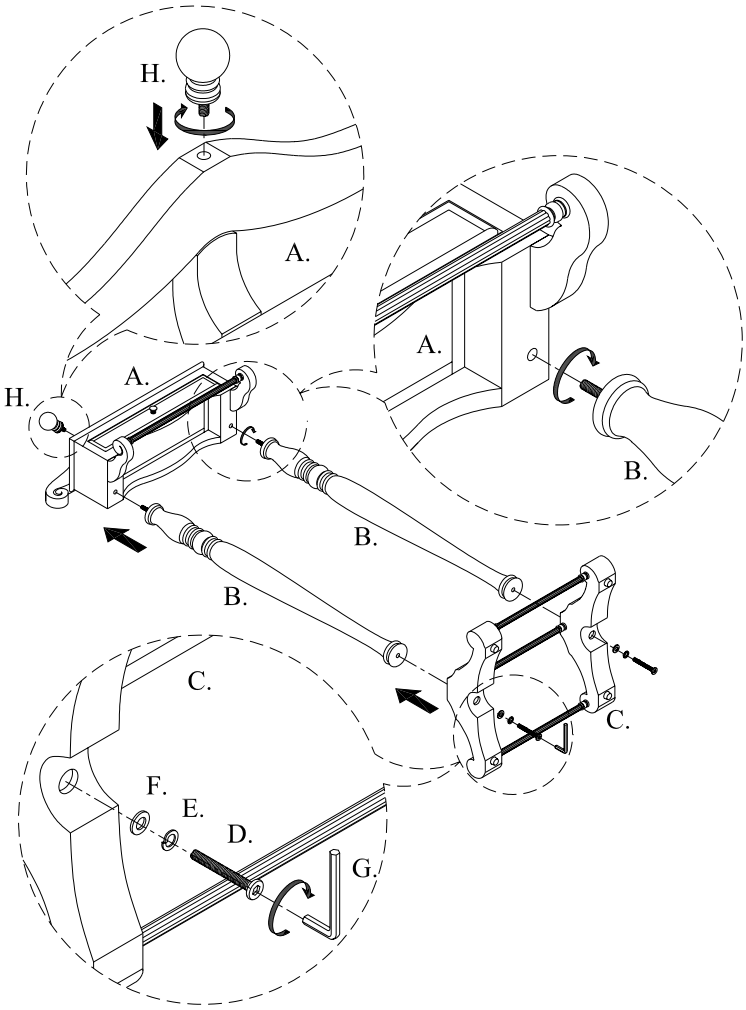

Illustration